NSK CASE STUDY

INDUSTRY
MATERIAL HANDLING

APPLICATION
OPTICAL SORTER

COST SAVINGS: $54,599

A recycler was experiencing regular failures of a mounted bearing unit on an optical sorting conveyor. In the three months after installation of the machine, a total of 5 bearing failures were recorded. An NSK application engineer examined the application and determined that vibration and lubrication issues were causing the bearing to fail prematurely. NSK recommended using SNN Plummer Blocks combined with NSKHPS Spherical Roller Bearings.

KEY FACTS

- Optical sorting machine
- Mounted units failing prematurely
- Vibration causing grub screws to loosen and shaft to spin on bearing inner ring
- Heat generation caused by no lubrication escape path.
- NSK solution: SNN plummer blocks with NSKHPS Spherical Roller Bearings
- Elimination of bearing failures
- Significant reduction in downtime and maintenance costs

Optical Sorter Conveyor

VALUE PROPOSALS

- NSK Application Engineering performed an Application Review following a Failed Bearing Analysis
- It was determined that vibration had caused the grub screws to loosen, resulting in the shaft spinning in the bearing inner ring
- It was also determined that the type of mounted unit allowed for no grease escape path, causing excessive grease build up resulting in high heat generation
- NSK recommended HPS Spherical Roller Bearings mounted on adapter sleeves in an SNN plummer block housing
- The adapter sleeve locking method prevents the bearing from coming loose on the shaft even with vibration
- NSK SNN plummer blocks provided a grease escape hole as standard, preventing excessive grease build
- No failures have been recorded since suggested recommendations were implemented

PRODUCT FEATURES

- Equipped with 2 lubrication and 1 draining hole
- Solid base corners for locating pins
- Square shape and center marks
- Easy assembly and alignment with low maintenance costs
- High rigidity-minimizing deformation of the bearing seat
- Comprehensive range of sealing & arrangements to match all needs
- Excellent heat transfer
- Housing can be used with both double row self-aligning ball bearings or double row spherical roller bearings

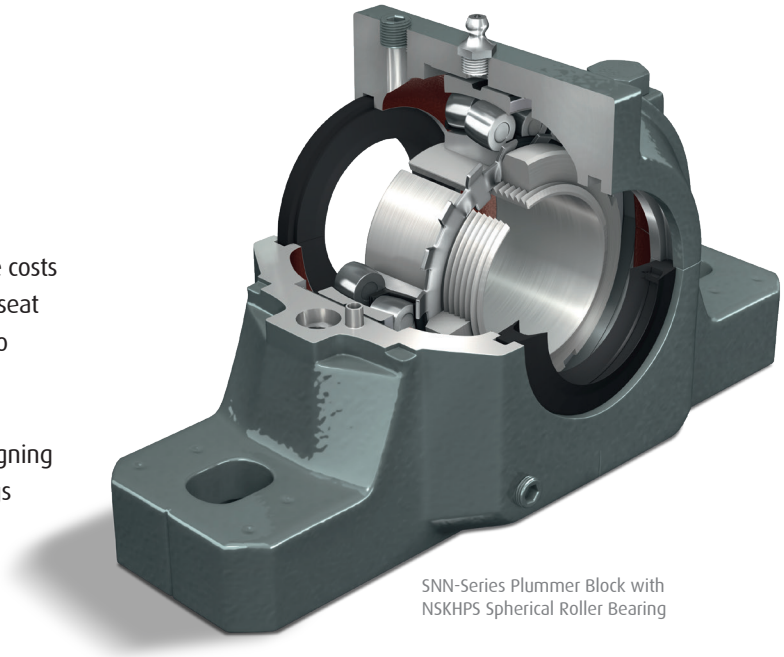

SNN-Series Plummer Block with NSKHPS Spherical Roller Bearing

COST-SAVINGS BREAKDOWN

BEFORE	COST P.A.	NSK SOLUTION	COST P.A.
20 bearings annually	$8,998	4 bearings annually	$900
10 breakdowns annually, 2 hours per breakdown, $2,250 per hour cost	$45,000	No breakdowns	$0
Fitting and inspection	$3,000	Initial fitting costs	$599
No training	$0	Training and install supervision	$900
TOTAL COSTS	**$56,998**		**$2,399**

YOUR PARTNER FOR MACHINE OPTIMIZATION

Our AIP Added Value Program is based around a simple proposition: 'improvement pays'.
By working with you throughout the AIP Value Cycle, we will help you achieve improvements in machine reliability, productivity and performance, all of which carry a tangible and measurable cost benefit – and we have the tools to prove it! That's what we mean by **improvement pays**.

aip NSK experts